DocuSign Envelope ID: 266BAFA8-2E74-4103-838C-176DC29AA7B6

Agenda Item # 21C
Date 7/13/22

OPR # 2627 WO # 728376
PROJ ENGR BENITEZ

COPY

DODGE COUNTY UTILITY INSTALLATION AGREEMENT
Public Utilities

WITNESS, that this shall be an agreement between Dodge County, hereafter referred to as the County and **OMAHA PUBLIC POWER DISTRICT**, hereafter referred to as the Applicant. Whereas, the County and Applicant do hereby agree,

1. THAT, the Applicant shall be permitted to install a **overhead and underground electric distribution line** under, through, or aerial, the Public Right-of-Way of Dodge County.

2. THAT, the County and Townships are the owners and responsible for the Public Right-of-Way in the County and Applicant desires to install a Utility on Public Right-of Way.

3. THAT, in consideration of this agreement, the County does hereby permit Applicant to lay, install and construct said Utility in the Public Right-of-Way between_(Description of Property or Sections) in **SE COR SEC 28 T-19-N, R-08-E TO ~ NE COR SEC 22 T-19-N, R-08-E** Township, Dodge County, Nebraska.

4. THAT, the permit on the part of Dodge County is revocable at the will of the County, and Applicant agrees that upon written notice from the County Board of Supervisors, he will immediately and forthwith remove said Utility and any and all pipes or other material contained or used in connection with said Utility and return the roadway occupied by said Utility to substantially it's original condition as before installation of said Utility.

5. THAT, the Applicant shall notify the Highway Superintendent and local Township for the purpose of removing the gravel windrow to the opposite side of road so as not to lose any gravel in the open trench.

6. THAT, all backfill in the Public Right-of-Way proper shall be made with material excavated from the crossing or with material equivalent thereto in texture. Material shall be placed in six inch lifts for the full depth of the trench and compacted by tamping to the original cross section. All utilities placed in areas susceptible to erosion shall place adequate protection against erosion. This protection may include bale checks, silt fence and erosion blankets. All vegetation destroyed shall be replaced. Disturbed areas will be reseeded with native grasses and a starter fertilizer. The minimum depth of earth cover over the utility line shall be 3 feet. Installation of underground utility lines under the traveled portion of an existing county road way must be encased in a plastic or steel conduit. The casing shall be bored from the toe of the shoulder slope to the toe of the opposite shoulder slope. The utility shall be placed at a minimum depth of 3 feet below the bottom elevation of the parallel road ditch. Applicant and his contractor or subcontractors are responsible for temporary traffic control on Dodge County Right-of-Way based on the standards and guidelines found in Part 6 of the 2009 Edition of the Manual on Uniform Traffic Control Devices (MUTCD) to insure a safe work zone for the workers and the public. Applicant will provide all necessary signs, barricades, cones, flaggers and message boards.

7. THAT, the Applicant shall obtain approval of all County road restoration from the County Highway Superintendent or Township Official prior to leaving the site(s).

8. THAT, all backfilled area(s) disturbed by excavation and backfill operations shall be graded, hand dressed as required to restore the terrain to its original shape, grade, and cross section, and regraveled or rerocked at a rate of 150 tons per mile as directed by the County Highway Superintendent or Township Official.

9. THAT, the Applicant shall as directed by the County Highway Superintendent or Township Official remove at the Applicant's expense from the Public Right-of-Way all temporary structures, and waste materials resulting from their operations.

10. THAT, the Applicant shall file a scaled set of plans, showing the Utility route, depth, and distance from the section line with the Dodge County Highway Superintendent.

11. THAT, the Applicant shall when installing an aerial Utility, shall install such Utility one foot inside the Public Right-of-Way and at a minimum height of 18 feet above the traveled way.

12. THAT, the future maintenance of said Utility and reinstallation or reconstruction of same for any purpose whatsoever shall be borne by Applicant.

13. THAT, Applicant does hereby agree to hold the County or any of its Officers, Agents, or Employees forever harmless of all liabilities due to improper installation, construction, and maintenance of said Utility.

14. ~~THAT, the Applicant shall submit an Insurance Certificate verifying General Liability of $1,000,000.00; Personal Injury of $500,000.00; Product & Completed Operations Aggregate of $1,000,000.00; Medical Expense (Any One Person) of $5,000.00; Each Occurrence of $500,000.00. Certificate to be filed with this application.~~

15. **THAT, this permit is valid for 6 months from the date of issuance or reapplication is required to renew.**

IN WITNESS WHEREOF, the parties aforesaid have hereto set their hand this 27 day of JUNE, 2022.

DocuSigned by:
Sharyl L McGuire
A30A7140AE9244B...
Signature of Applicant

Scott Hepperly
Dodge County Highway Superintendent

OMAHA PUBLIC POWER DISTRICT
ATTN: Alyssa Bryant, 6E/EP3
444 S 16TH ST MALL
OMAHA, NE 68102-2247
Address of Applicant

July 13, 2022
Date Filed with Dodge County Board of Supervisors

2022 JUN 28 AM 10: 3
RECEIVED
DODGE COUNTY CLERK

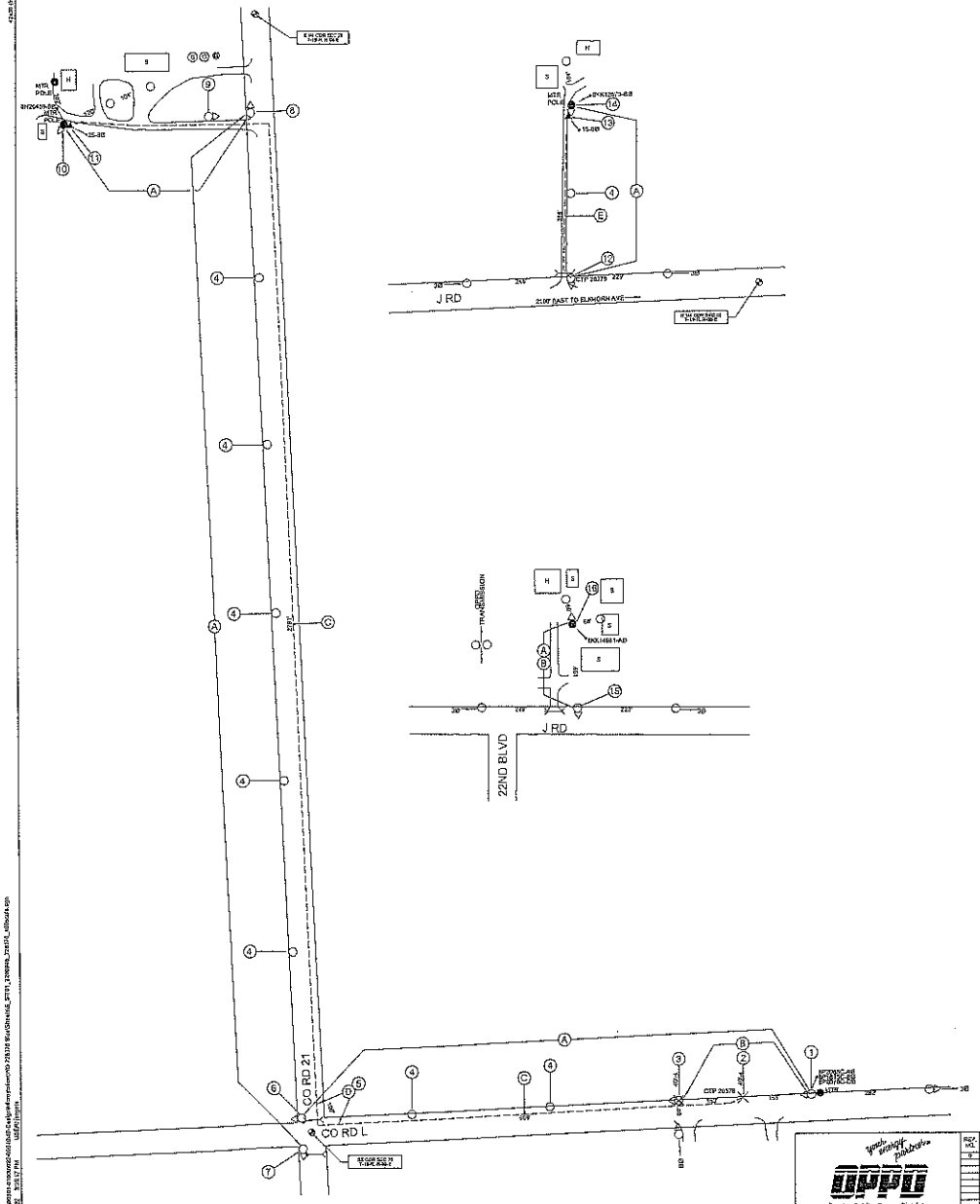

0072837501

1. REPL STD 380C (W), STD 387 (W), STD 440-4 / STD 380 (W), STD 380 (W), GUY STD 440-12 @ PRI POSN, GUY STD 440-4 @ NEUT POSN (ATTACH TO EXIST ANCHOR), CHECK FOR GND ROD, INSTL STD 401A4 IF MISSING.
2. CTP 26378, SET 40'-4 POLE, GND STD 403HK, STD 401AA, INSTL STD 380A, STD 380A, STD 385A (168A CO, 168 FU, 3Ø).
3. REPL 35'-6 POLE, STD 380A, 1/0 380C, STD 387 / 40'-4 POLE, INSTL STD 380 (B), STD 380B (B), STD 380 (B), STD 387 (B), 397 168A PISA STD 435B, GUY STD 440-12 @ PRI POS'N, STD 440-3 @ NEUT POS'N (20' LEAD, W), MV 99 PRI & NEUT (N).
4. RMV 35'-6 POLE, STD 385A.
5. BORE 1-2" HDPE SCHED-40 GND (0000361123).
6. RMV 35'-4 POLE, 3-STD 380B, 168A CO, 168 FU, 3-STD 387, STD 441, STD 435A.
7. RMV 35'-4 POLE, STD 380B, STD 387, STD 441, STD 435A.
8. RMV 35'-6 POLE, 3-STD 380B, 2-STD 387, STD 441, STD 435A.
9. RMV 35'-6 POLE, STD 385A, 2-STD 380B, 2-STD 387, STD 441, STD 435A.
10. REPL STD 380B, XFMR STD 560A (MK28476-DD), STD 387, STD 441, STD 435A / STD 811A, SET 15M PISA STD 435B, GUY STD 440-3 @ SEC POSN (10' LEAD, SW), TOP POLE ABV SECONDARY.
11. INSTL PM XFMR STD 125RB (75 KVA, SB), STD 113, STD 231B.
12. CTP 26378, DEPL STD 387B (AB FU, RB, N), STD 441, STD 435A / STD 125M (100A CO, 168 FU, BB). CHECK FOR GND ROD, INSTL STD 401A4 IF MISSING.
13. INSTL PM XFMR STD 125RB (15 KVA, SB), STD 113, STD 231B.
14. REPL STD 380B, XFMR STD 560A (BKX12STD-BB), STD 387, STD 441, STD 435A / STD 811A, SET 15M PISA STD 435B, GUY STD 440-3 @ SEC POSN (10' LEAD, S). TOP POLE ABV SECONDARY.
15. REPL STD 787A (40B FU, AB, N), STD 387, STD 441 / STD 787A (40B FU, AB, N), STD 380B, GUY STD 440-8 @ PRI POSN, STD 440-3 @ NEUT POSN (ATTACH TO EXIST ANCHOR), CHECK FOR GND ROD, INSTL STD 401A4 IF MISSING.
16. REPL STD 380B, STD 387 / STD 380, STD 380, GUY STD STD 440-3 @ NEUT POSN (ATTACH TO EXIST ANCHOR).

CONDUCTOR NOTES

A. RMV 3AL SOG 1Ø 7.2KV PRI & NEUT.

B. INSTL 3-#2/0 ACSR 1Ø 7.2kV PRI & NEUT (SAG RO 250-23).

C. PULL 1-#1/0 AL 15kV XLP JKT 1Ø PRI CA (0000600349).

D. PULL 1-#1/0 AL 15kV XLP JKT 1Ø PRI CA (0000600349).

E. BORE 1-#1/0 AL 15kV XLP JKT 1Ø PRI CA (0000602149).

PERMITS REQUIRED

A. DODGE CO 2627

GENERAL NOTES: -INSTL S/D 199 AT ALL SPIDE LOCATIONS.
-NO INFORMATION FOR RIGHT-OF-WAY ALONG CO RD J EXISTS. ROW LINES SHOWN ARE ESTIMATED BASED ON BACK OF DITCH LOCATIONS.

N

0 50' 100' 200'
SCALE IN FEET

REV NO.	DATE	REVISIONS DESCRIPTION
0	06-21-2022	ISSUED FOR CONSTRUCTION

REVISIONS

OPPD Omaha Public Power District

REBUILD 1Ø & 2Ø PRIMARY
W.O. 00728376-01

VIC OF HWY 77 & J RD
CKT 224

WINSLOW, NEBRASKA | SKE-22-756 | 2022

olsson
601 P Street, Suite 200
P.O. Box 84608
Lincoln, NE 68508
TEL 402.474.6311
FAX 402.474.5160
www.olsson.com

drawn by: DAE
checked by: ACE
designed by: MB
drawing no. 1
SHEET 1 OF 4

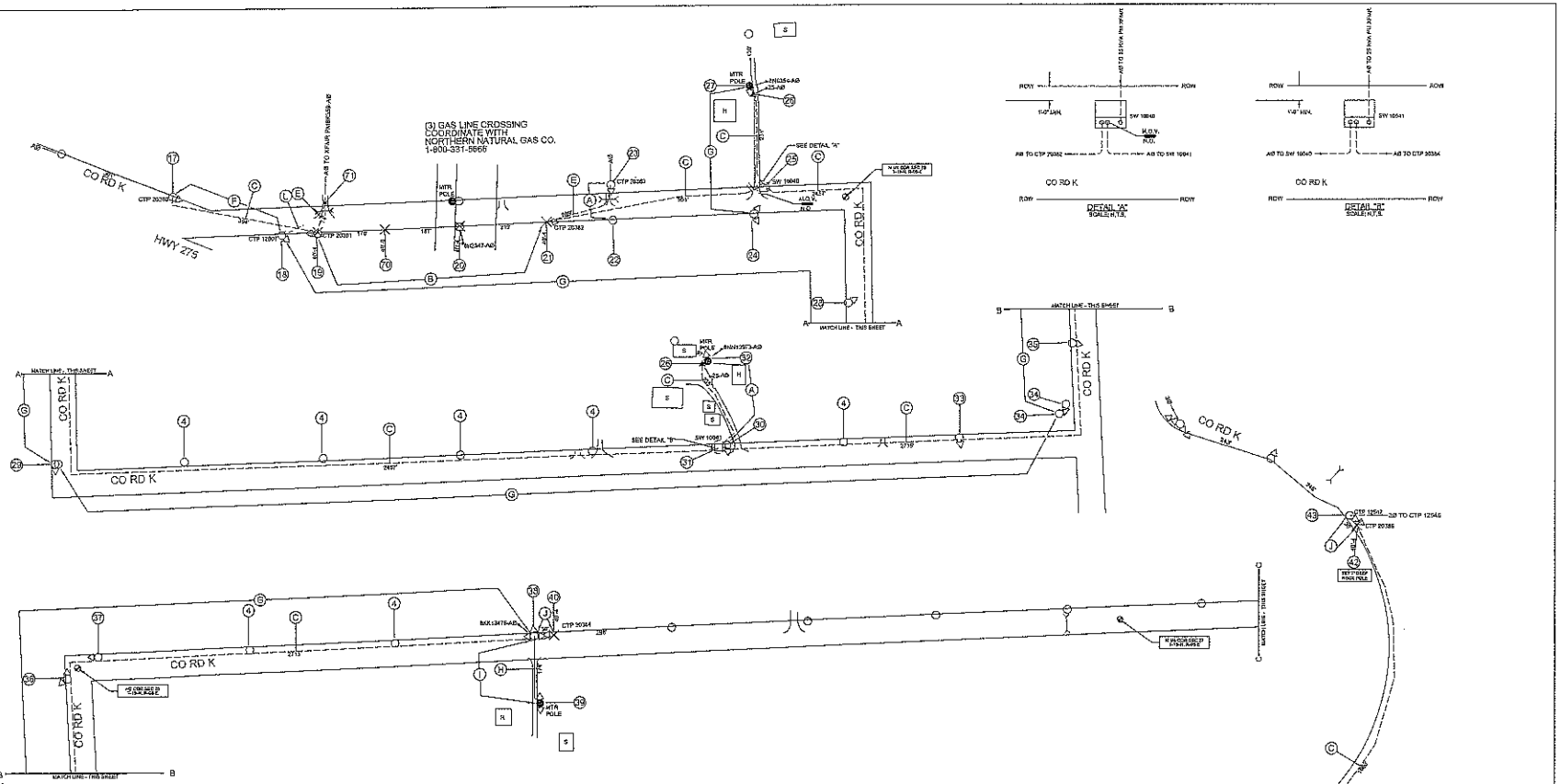

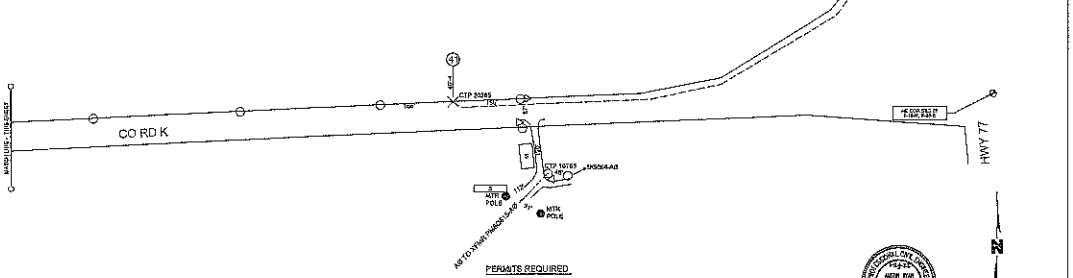

0072837601

4. RMV 35-6 POLE, STD 290A.
17. CTP 20320, REPL STD 390A / STD 389, STD 388, STD 1054 (100A CO, 6EADE, AB), SET 16M PISA STD 435B, GUY STD 440-13 @ PRI POSN, STD 440-3 @ NEUT POSN (20' LEAD, SB), CHECK FOR GND ROD, INSTL STD 401M4 IF MISSING.
16. CTP 12607, RMV 35-6 POLE, STD 388, STD 388, STD 387, STD 1064 (100A CO, 10E PU, AB), STD 440-8, STD 435A.
15. CTP 20381, REPL 35-6 POLE, STD 388 / 40-4 POLE, GND STD 402NR, STD 401A4, INSTL STD 389 (IE), STD 388, 2-STD 1054 (100A CO, 6EADE, AB, IM) / 100A CO, 10E PU, AB, N), SET 16M PISA STD 435B, GUY STD 440-13 @ PRI POSN, STD 440-3 @ NEUT POSN (20' LEAD, W).
20. REPL 35-6 POLE, STD 389A, RMV STD 990A (W/E247-AB), STD 312 / 40-4 POLE, GND STD 402NR, STD 401A4, INSTL STD 389A, XFMR STD 989A (10 KVA, 2.5K PV, AB), STD 448, STD 659, 3-PI 2SC (W).
21. CTP 20382, SET 40-4 POLE, GND STD 402NR, STD 401A4, INSTL STD 389 (W), 2-STD 1054 (100A CO, 3EE PU, AB, IE) / 100A CO, 6EE PU, AB, E), STD 353 (W), SET 16M PISA STD 435B, GUY STD 440-13 @ PRI POSN, STD 440-3 @ NEUT POSN (20' LEAD, E).
22. RMV 35-4 POLE, STD 390A, STD 389B, STD 387.
23. CTP 20383, REPL STD 389A, STD 389B, STD 387, STD 441 / STD 1054 (100A CO, 6EADE, AB), GUY STD 440-13 @ PRI POSN, GUY STD 440-3 @ NEUT POSN (ATTACH TO EXIST ANCHORS), CHECK FOR GROUND ROD, INSTL STD 401M4 IF MISSING.
24. RMV STD 390A, STD 389B, STD 311A, STD 387, 2-STD 440, 2-STD 435A.
25. SW 10640, INSTL STD 1448 (300A, 3-WAY, AB), OPR H.O. (IF E) LINE SWT, STD 1438, IN (N) GOING LOAD SWT TO 25KVA XFMR, BNK PU, TERM 3-#10 AL 15KV XLP JKT 1Ø PRI CA, 3-STD 2378, SEE DETAIL "A".
26. INSTL PM XFMR STD 175RB (25 KVA, AB), STD 118, STD 237B.
27. REPL STD 389B, XFMR STD 989A (RNH354-AB), STD 387, STD 440, STD 435A / STD 611A, SET 16M PISA STD 435B, GUY STD 440-3 @ SEC POSN (18' LEAD, S), TOP POLE ABV SECONDARY.
28. RMV 30-4 POLE, STD 389A, STD 388A, STD 441, STD 435A.
29. RMV 40-6 POLE, 30-4 PUSH BRACE, 2-STD 389B, 2-STD 387, STD 441, STD 435A.
30. RMV 35-6 POLE, STD 389A, STD 388B, STD 387, STD 441, STD 435A.
31. SW 10641, INSTL STD 1448 (300A, 3-WAY, AB), IN (N) GOING LOAD SWT TO 25KVA XFMR, BNK PU, TERM 3-#10 AL 15KV XLP JKT 1Ø PRI CA, 3-STD 1378, SEE DETAIL "B".
32. REPL STD 389B, XFMR STD 989A (RNH1373-AB), STD 387, STD 440, STD 435A / STD 611A, TOP POLE ABV SECONDARY.
33. RMV 35-6 POLE, 2-STD 389B, STD 313A, STD 440, STD 435A.
34. RMV 35-8 POLE, 2-STD 389B, 2-STD 387, STD 440-6, STD 440-3, 2-STD 435A.
35. RMV 35-6 POLE, STD 390C, STD 440-6, STD 435A.
36. RMV 35-6 POLE, STD 389B, STD 389B, 2-STD 387, STD 440, STD 441, 2-STD 435A.
37. RMV 35-6 POLE, STD 389B, STD 389B, 2-STD 387, STD 440, STD 435A.
38. REPL STD 389A, STD 389B (W), STD 387 (N), STD 312, 2-STD 440 (N & E), 2-STD 435A (N & E) / STD 608A, CHECK FOR GND ROD, INSTL STD 401M4 IF MISSING.
39. REPL STD 312, STD 440 (S), STD 435A (S) / STD 611A, SET 16M PISA STD 435B, GUY STD 440-3 @ SEC POSN (18' LEAD, N).
40. CTP 20384, SET 40-4 POLE, GND STD 402NR, STD 401A4, INSTL STD 389 (W), STD 389B (S), STD 1054 (100A CO, 6EE PU, AB), STD 388 (W), STD 387 (E), SET 16M PISA STD 435B, GUY STD 440-13 @ PRI POSN, STD 440-3 @ NEUT POSN (20' LEAD, W), 2-PI 1Ø PRI & NEUT (E).
41. CTP 20385, SET 40-4 POLE, GND STD 402NR, STD 401A4, INSTL STD 389A, STD 1054 (100A CO, 6EE PU, AB).
42. CTP 10763, SET 40-4 POLE (SET 7' DEEP, ROCK BACKFILL) GND STD 402NR, STD 401A4, INSTL STD 389 (NW), STD 1054 (100A CO, 10EE PU, AB), STD 388 (NW).
43. CTP 12547, INSTL STD 389 (SE), STD 388A (SE), CHECK FOR GND ROD, INSTL STD 401M4 IF MISSING.
44. SET 40-6 POLE, GND STD 402NR, STD 401A4, STD 715A, INSTL STD 389A.
71. LOCATE & EXPOSE EXIST 1-#1/0 AL 15KV XLP JKT 1Ø PRI CA & SPLICE EXIST 1-#1/0 AL 15KV XLP JKT 1Ø PRI CA TO NEW 1-#1/0 AL 15KV XLP JKT 1Ø PRI CA (0000002349), STD 2331.

CONDUCTOR NOTES

A. RMV 3-#6 SCC 1Ø 7.2KV PRI & NEUT.
B. INSTL 2-#3/0 ACSR 1Ø 7.2KV PRI & NEUT (SAG FOR 25°-28).
C. PLOW 1-#1/0 AL 15KV XLP JKT 1Ø PRI CA (0000002349).
E. BORE 1-#1/0 AL 15KV XLP JKT 1Ø PRI CA (0000002349).
F. RMV 3-#2 ACSR 1Ø 7.2KV PRI & NEUT.
G. RMV 3-#6 SCC 1Ø 7.2KV PRI & NEUT.
H. BORE 1-#2/0 XCUAL AL XLP TRX 12KV-#2/0 SEG CA (0000002357).
K. RMV 3-#6 SCC 1Ø 120/240V OPEN WIRE SEC.
I. INSTL 2-#2/0 ACSR 1Ø 7.2KV PRI & NEUT (SLACK SPAN).
L. ABON 1-#1/0 AL 15KV XLP JKT 1Ø PRI CA.

PERMITS REQUIRED

A. DODGE CO 2527

GENERAL NOTE: INSTL STD 103 AT ALL SPICE LOCATIONS.
NO INFORMATION FOR RIGHT-OF-WAY ALONG CO RD J
EXISTS. ROW LINES SHOWN ARE ESTIMATED BASED ON
BACK OF DITCH LOCATIONS.

REV. NO.	DATE	REVISIONS DESCRIPTION
0	09-26-2022	ISSUED FOR CONSTRUCTION

REVISIONS

Omaha Public Power District

REBUILD 1Ø & 2Ø PRIMARY
W.O. 00728375-01

VIC OF HWY 77 & J RD
CKT 224

WINSLOW, NEBRASKA | SKE-22-756 | 2022

olsson
601 P Street, Suite 200
P.O. Box 84608
Lincoln, NE 68508
TEL 402.474.6311
FAX 402.474.5160
www.olsson.com

SHEET
2 OF 4

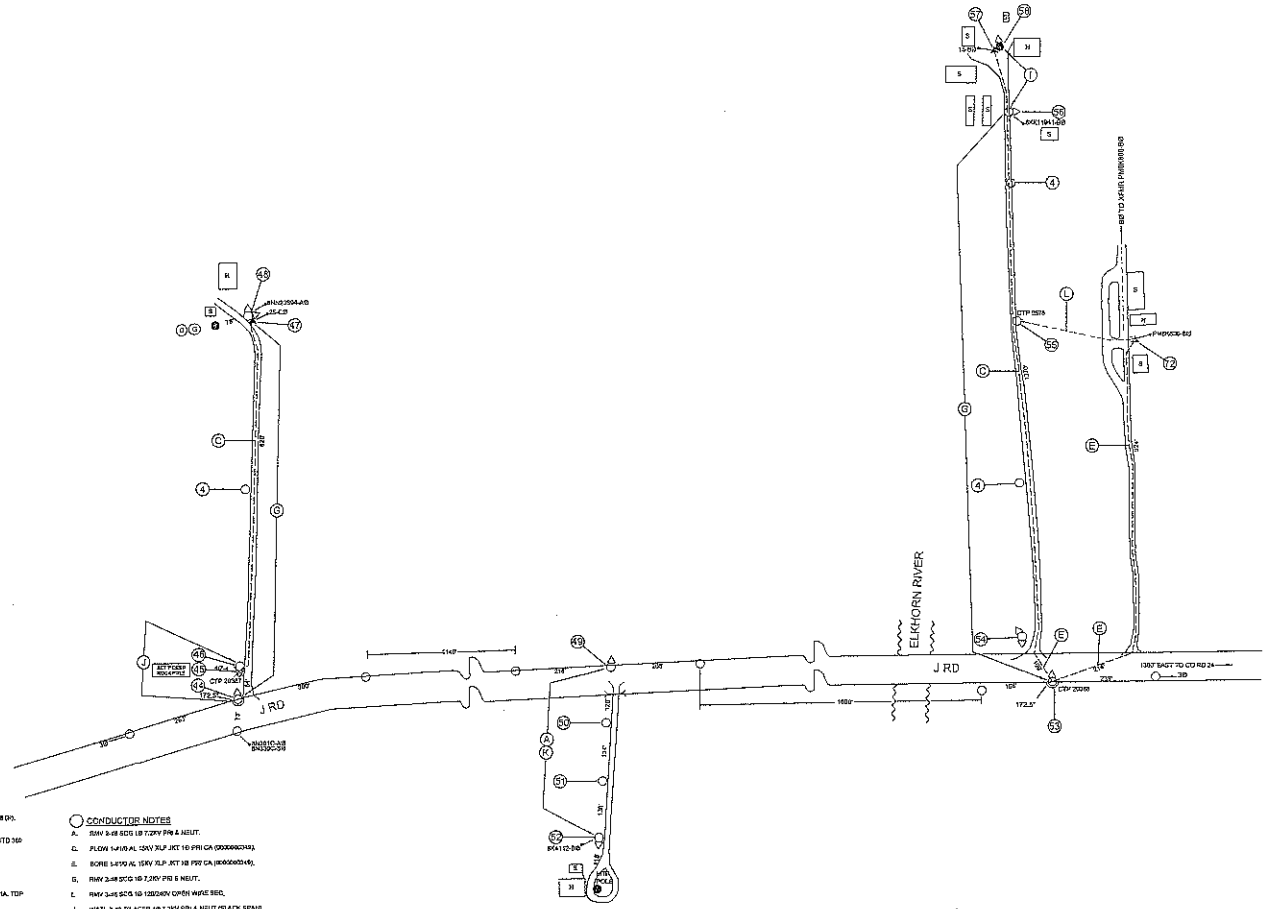
ELKHORN RIVER
J RD
J RD
BEY CREE ROLLAPRIL
CTP 2026B
CTP 2026B
CTP 2026B
CTP 2026B
1307' EAST TO CO RD 24
BE TO ANSEL PHBK(0)B-B6
172.5°
172.5°
160'
314'
300'
300'
300

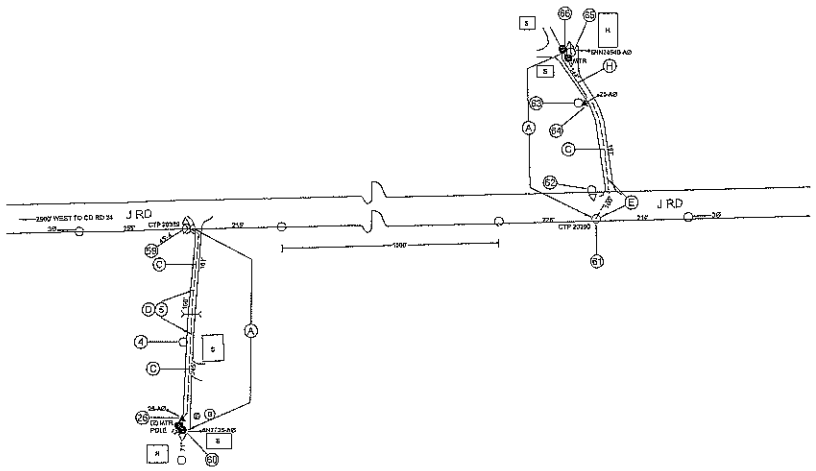

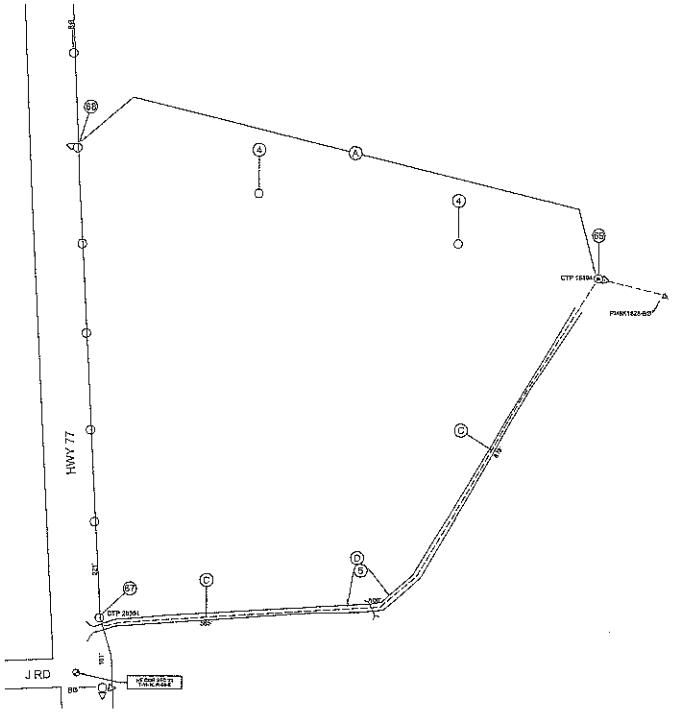

00728376-01

1. RMV 35-6 POLE, STD 396A.
2. BORE 1-2" HDPE SCHED-40 CND (00A0061103).
26. INSTL PM XFMR STD 175RB (25 KVA, AB), STD 118, STD 291R.
39. CTP 20390, REPL 40-4 POLE, STD 395A, STD 395A (NBE FU, AB, HI), STD 367 / 45-4 POLE, GND STD 402N, STD 404M, INSTL STD 589A, STD 1054 (100A CO, 10E FU, AB).
50. REPL STD 395, XFMR STD 565A (6KV735-AB), STD 367, STD 443, STD 435A / STD 611A, TOP POLE A3V SECONDARY.
51. CTP 20390, REPL STD 767A (SBE FU, AB, HI), STD 367 / STD 1054 (100A CO, 10E FU, AB), CHECK FOR GND ROD, INSTL STD 401M IF MISSING.
52. RMV 30-6 POLE, STD 395A, 2-STD 395, 2-STD 367, STD 440, STD 435A.
53. RMV 40-2 POLE, STD 395A, 2-STD 395, 2-STD 367.
54. INSTL PM XFMR STD 175RB (25 KVA, AB, NEOT), STD 118, STD 291S, STD 291R.
55. RMV 35-4 POLE, STD 395, XFMR STD 565A (6KV2546-AB), STD 367, STD 429, STD 691, STD 412, STD 440, STD 435A.
56. REPL STD 163 / STD 168.
57. CTP 20351, INSTL STD 1054 (100A CO, 10E FU, SB), CHECK FOR GND ROD, INSTL STD 401M IF MISSING.
58. RMV STD 767A (SBE FU), STD 367, STD 441, STD 435A.
59. CTP 18184, REPL 40-4 POLE, STD 395, STD 1054 (100A CO, BLADE, FU), STD 367, STD 445A, STD 435A / SPLC 1-4/0 AL 15KV XLP JKT 1Ø PRI CA, STD 291L.

CONDUCTOR NOTES

A. RMV 2-#6 SCP 1Ø 7.2KV PRI & NEUT.
C. PLDN 1-4/0 AL 15KV XLP JKT 1Ø PRI CA (00C000349).
D. PULL 1-#1/0 AL 15KV XLP JKT 1Ø PRI CA (00C000349).
E. BORE 1-#1/0 AL 15KV XLP JKT 1Ø PRI CA (00C000349).
H. BORE 1-350 KCMIL AL XLP TRX 120/240V SEC CA (00C000577).

PERMITS REQUIRED

A. DODGE CO 2027

GENERAL NOTE: INSTL STD 101 AT ALL SPICE LOCATIONS.
VIO INFORMATION FOR RIGHT-OF-WAY ALONG CO RD J
SHEETS, ROW LINES SHOWN ARE ESTIMATED BASED ON
PACE OF DITCH LOCATIONS.

N

0 50' 100' 200'
SCALE IN FEET

PROFESSIONAL CIVIL ENGINEER
JASON ALAN ACKMAN
NEBRASKA
SCALE OF NEBRASKA

Your energy partner
OPPD
Omaha Public Power District

REV. NO.	DATE	REVISIONS DESCRIPTION
0	09-26-2022	ISSUED FOR CONSTRUCTION

REVISIONS

REBUILD 1Ø & 2Ø PRIMARY
W.O. 00728376-01

VIC OF HWY 77 & J RD
CKT 224

WINSLOW, NEBRASKA | SKS-22-755 | 2022

olsson
601 P Street, Suite 200
P.O. Box 84608
Lincoln, NE 68508
TEL 402.474.6311
FAX 402.474.5160
www.olsson.com

DRAWN BY: EAC
CHECKED BY: KDC
APPROVED BY: JAA
DATE: 10/24/22
PROJECT NO.: 017-0066
SHEET NO.: 1
DATE: 10-24-22

SHEET
4 OF 4